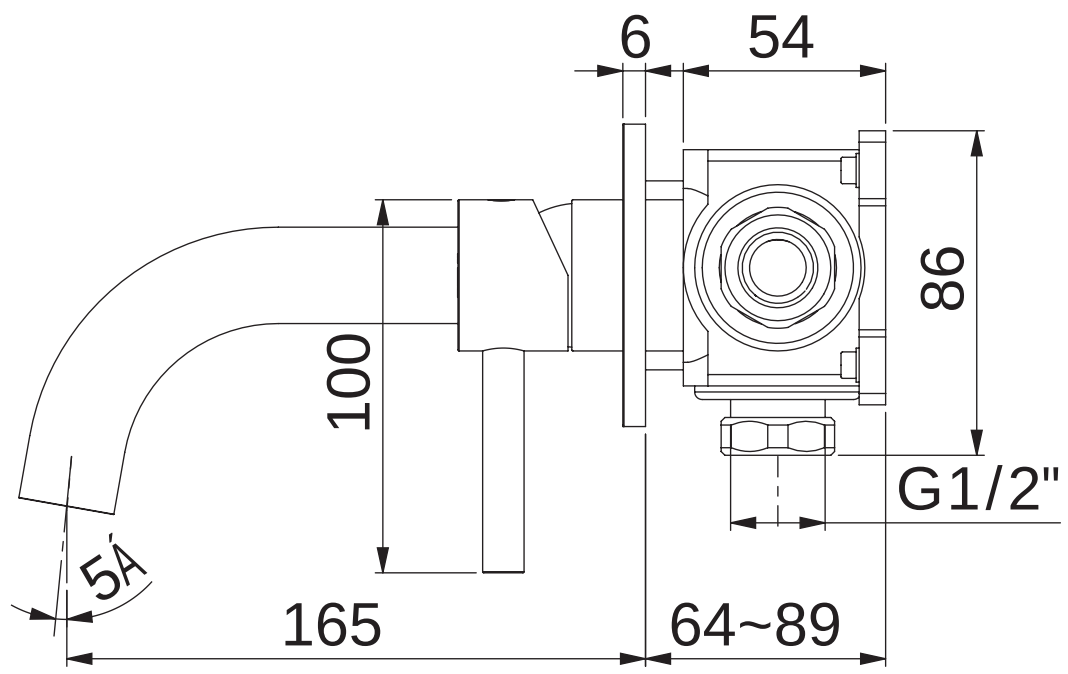

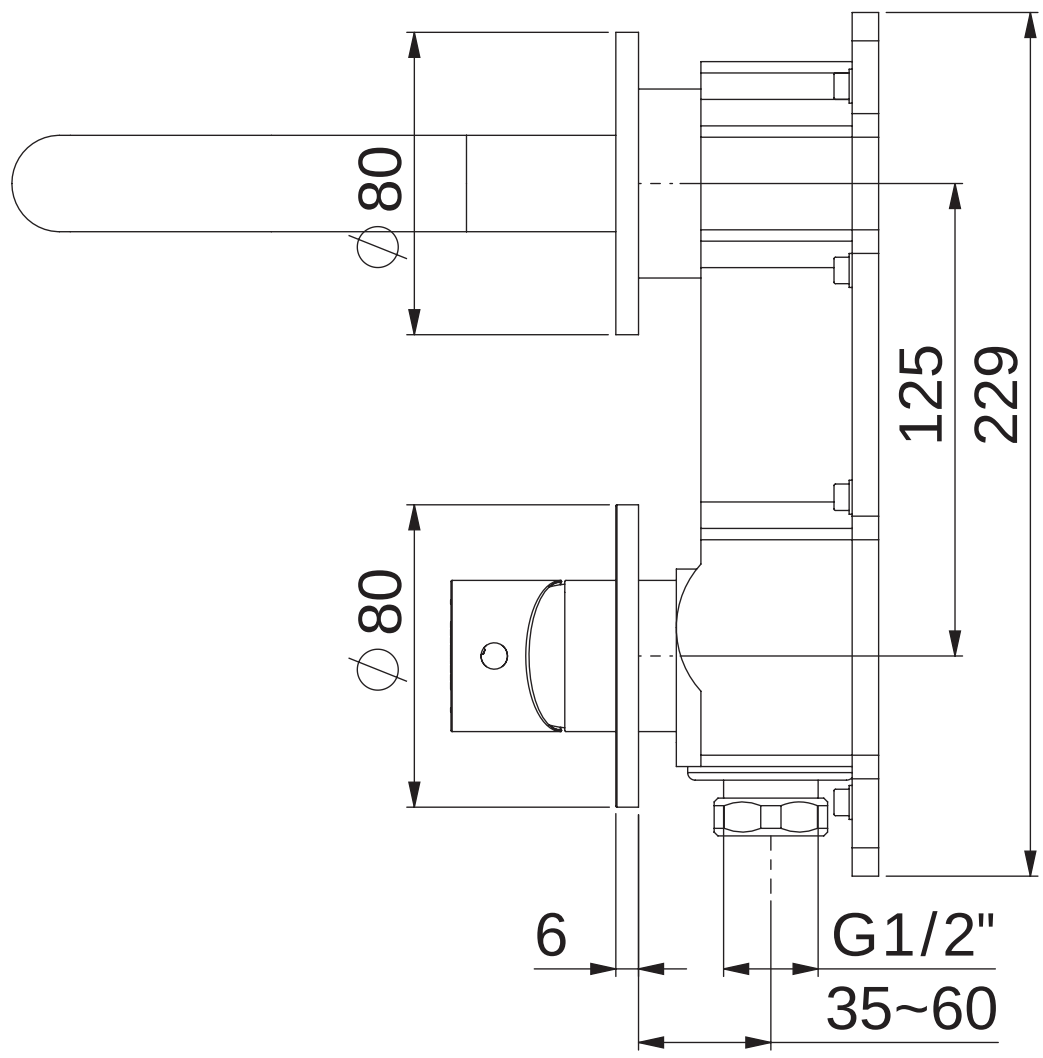

100 1804 3

STEINBERG